FT421 Irrigation Flow Computer Instructions

General Information

The FT421 is a loop-powered microcontroller-based transmitter/indicator. It displays rate in gallons/minute, sec, hr, day and total in acre-feet. It provides a 4-20 mA analog signal plus a programmable pulse output for chemical injection control or data logging.

The rugged cast-aluminum housing is gasketed for maximum weather protection, and the electronics are potted in a solid block of urethane. A membrane keypad allows settings to be changed without removing the cover. The wall mount version comes with brackets for mounting. The FT421 can also be factory installed on IP, TX or EX flow sensors.

Specifications

Power	4 mA DC (4-20 mA loop), 14-30 VDC
Display	
Rate (GPM)	6-digit autorange 1/2" character height
Total (Acre-Ft)	8-digit 5/16" character height
Pulse Output	• 0.1 second open collector pulse (scaled) • high alarm or low alarm • sensor pulse (unscaled)
Input	Pulse frequency, + 5 VDC
K Factor Range	0.001 - 99999.999
Pulse Output Range	0.1-9999999.9 units/pulse
Flow Alarm Output Range	0.01 - 999999.99
Temperature	0 - 70 degrees Centigrade (32-158 Fahrenheit)
Environmental	NEMA 4X

Features

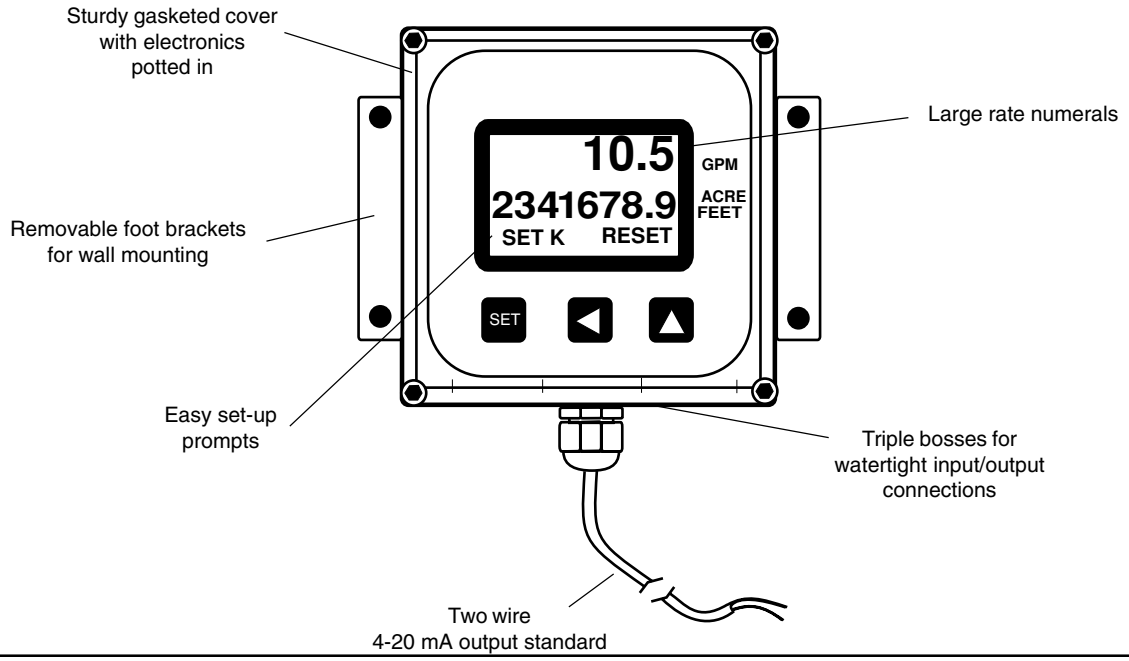

Installation

To mount the FT421 on a wall, hold the unit in the desired position, mark the holes in the mounting feet, drill, and mount with screws.

This unit can also be mounted directly on a flow sensor for local reading. If the unit was ordered factory mounted to the top of a flow sensor, no further installation is required.

To mount the unit on a flow sensor, remove the housing cover. Place the lower half of the housing in the groove on the top of the flow sensor. An adapter is included in the packaging of the FT421 which threads into the top of any 80-Series flow sensor. Pull the sensor wires through the hole in the center of this adapter, then thread the adapter into place. Tighten the adapter using a screwdriver. Connect the wires, then replace the housing cover, orienting it any direction as desired for viewing convenience.

Connection

To connect the FT421 to a flow sensor, follow the diagram marked “Standard Connections”. This diagram also shows the connections for an external device, such as a chemical metering pump.

If the 4-20 mA current signal is not required, connect the power terminals to any 14-30 VDC current source.

Typical Chemical Metering Pump Applications

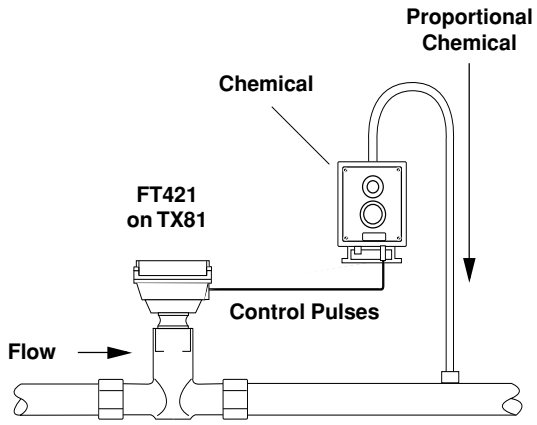

Programming

Caution: If output is being used to control an external device, such as a metering pump, do not connect the device until programming is completed. If malfunction or incorrect programming of the output could cause personal injury or property damage, separate safeguards must be installed to prevent such injury or damage.

Typical 4-20 mA Application

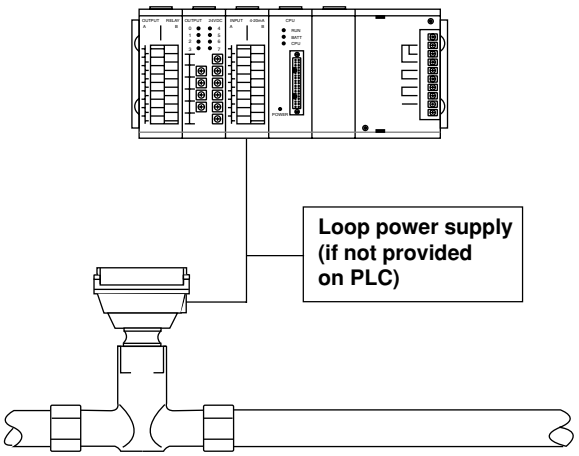

At a minimum, every FT421 must be programmed with the “K-factor”. This is simply the number of pulses per gallon which the meter or flow sensor meter produces.

To find the K-factor on any SeaMetrics flow sensor fitting or in-line meter, look on the model-serial label. The line reading K = xxxx is the desired number. For adjustable sensors (101,201,115,215) look in the instruction manual under your pipe size.

Set K-Factor. Begin by pressing the SET key once. The prompt **SET K** should appear on the display. The digit to the far right will be blinking. Use the up arrow key to reach your desired digit. Then press the left arrow key to move to the next digit. Repeat the process until the entire number is entered. (Note that the decimal is fixed at three places. If you only have two decimal places for your K-factor, enter a zero for the third digit.)

Standard Connections

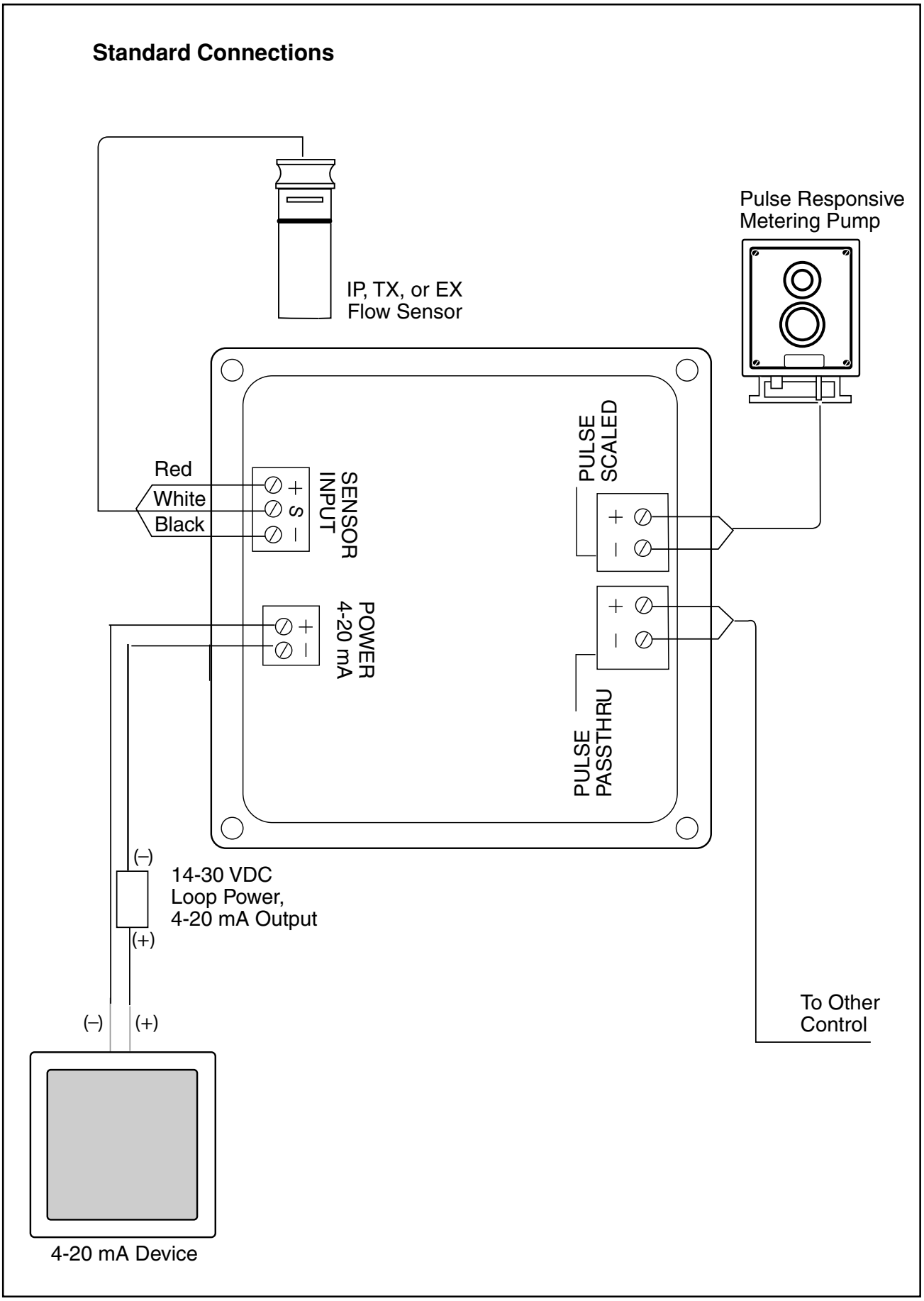

Set P. The second time the SET key is pressed, **SET P** will appear. Follow the same process as above to enter the desired pulse rate. This is the number of gallons (or other units, if you are using them) between pulses. **Note: If the pulse output feature is not being used, this step can be skipped. The P setting (pulse output) does not affect anything if it is not being used.**

> **Special Function: Flow Alarm**. If a flow alarm is needed, pressing all three buttons at once will bring up the appropriate settings while **SET P** is showing. Pressing the up arrow key changes from **P** (pulse output) to **AL HI** (high flow alarm). Pressing the up arrow key again changes to **AL LO** (low flow alarm). Press SET key to set alarm rate. Use the up arrow key and left arrow key to reach the desired settings. **Note: Using flow rate alarms eliminates the pulse output function.**

Set 20 mA. Press the SET key the third time, to set the flow rate, in units per time unit, at which 20 mA is desired. The processor will automatically scale the 4-20 mA loop accordingly, with 4 mA at zero flow.

Set Decimal Point. The fourth time the SET key is pressed, a **D** prompt appears. Pressing the up arrow key switches between no decimal place, one decimal place or two decimal places.

Set Time Unit. The fifth time the SET key is pressed, a blinking time unit appears. Press the up arrow key to select **SEC** (seconds), **MIN** (minutes), **HR** (hours) or **DAY** (days).

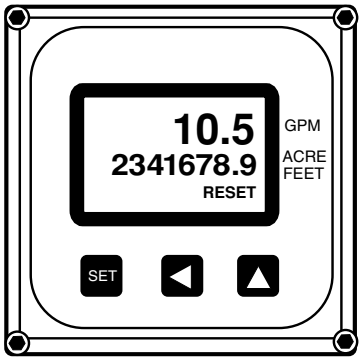

Operation

To return to normal operation after entering settings, press the SET key for a sixth time. The rate and total indicator numbers should appear in the display. If the unit is connected to an operating flow sensor, the larger-sized digits indicate flow rate and the smaller-sized digits indicate total.

Unless the unit has been ordered with the non-reset option, a **RESET** prompt is constantly visible in the lower right corner, above the up arrow key. Press this key at any time to reset the totalizer to zero.

Dimensions

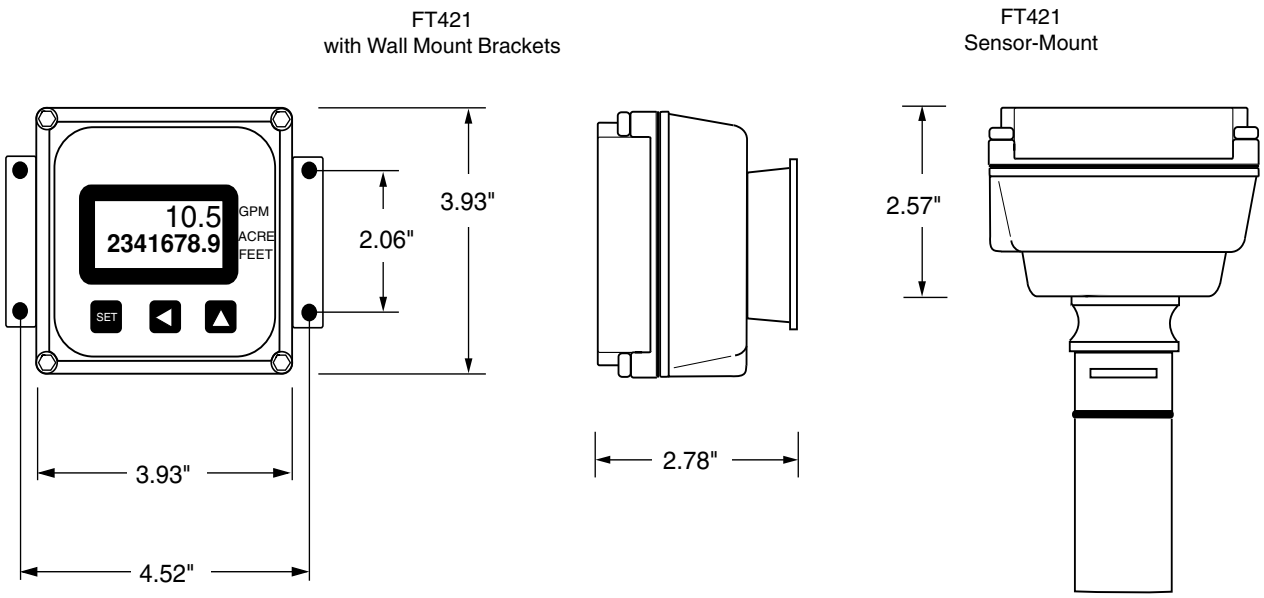

SeaMetrics
19026 72nd Ave. So., Kent, WA 98032 USA
Phone: 253-872-0284 Fax: 253-872-0285
www.seametrics.com 1-800-975-8153